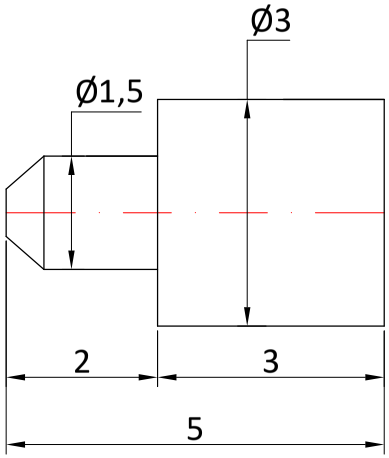

QUOTE SENSIBILI

Notes:				STAND OFF D3 H5 ESD BEIGE			
Material	Treatment	Finish			Drawn by	Approved by	Draw revision
ESD beige					E. Festa	S. Avesani	01.00
				Date	10/12/2025	10/12/2025	
General tolerance UNI 2768/1 - EN 22768/1 - DIN 7168				TECON®			
Object code DHE-305F300P	Scale 10:1	Customer	Dimensioni mm				

This drawing and its specifications are property of Tecon srl and cannot be reproduced, copied, used or given to third parties, in whole or in part, without its written permission. All rights are protected according to law.