FEINMETALL
Contact Technologies

Basic Contact Probes

F10068S150L200

Order code 1000078

General

Design	Basic Contact Probe
Family	F100
Pitch [mm/mil]	2.54 / 100
Temperature [C°]	-45°C...+80°C

Electrical specifications

Continuous current [A]	5.00
Typical contact resistance [mOhm]	20.00

Mechanical specifications

Preload [cN]	80.00
Spring force [cN]	200.00
Nominal travel [mm]	4.30
Maximum travel [mm]	6.40
Pointing accuracy +/- [mm]	0.08

Dimensions

Total length [mm]	33.30
Projection height [mm]	8.40
Tip style diameter [mm]	1.50
Barrel diameter [mm]	1.37

Materials & surfaces

Tip style	68
Plunger material	Steel
Plunger plating	Longtime Gold
Barrel material	Bronze
Barrel plating	Gold
Spring material	High-grade steel
Spring plating	Silver

Family drawing

All measurements are in mm.

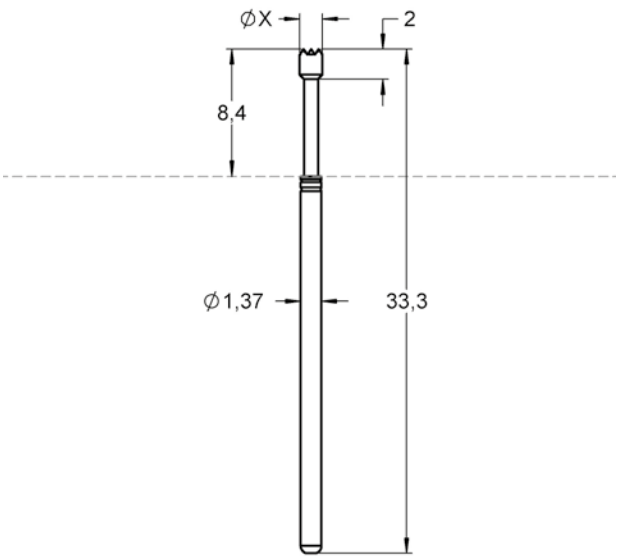

Accessories

Tool for receptacle	FEWZ-100EV
Tool for probe	1003566-FDWZ-100
Other	1097191-H100CR-7.6S1, 1133588-H100WW19-10.0AT, 1107897-H100WW10-2.5S1, 1100025-H100WW05-7.6S1, 1092174-H100WW10-10.0AT

Copyright © 2025-09-10

Tip style 1

Copyright © 2025-09-10